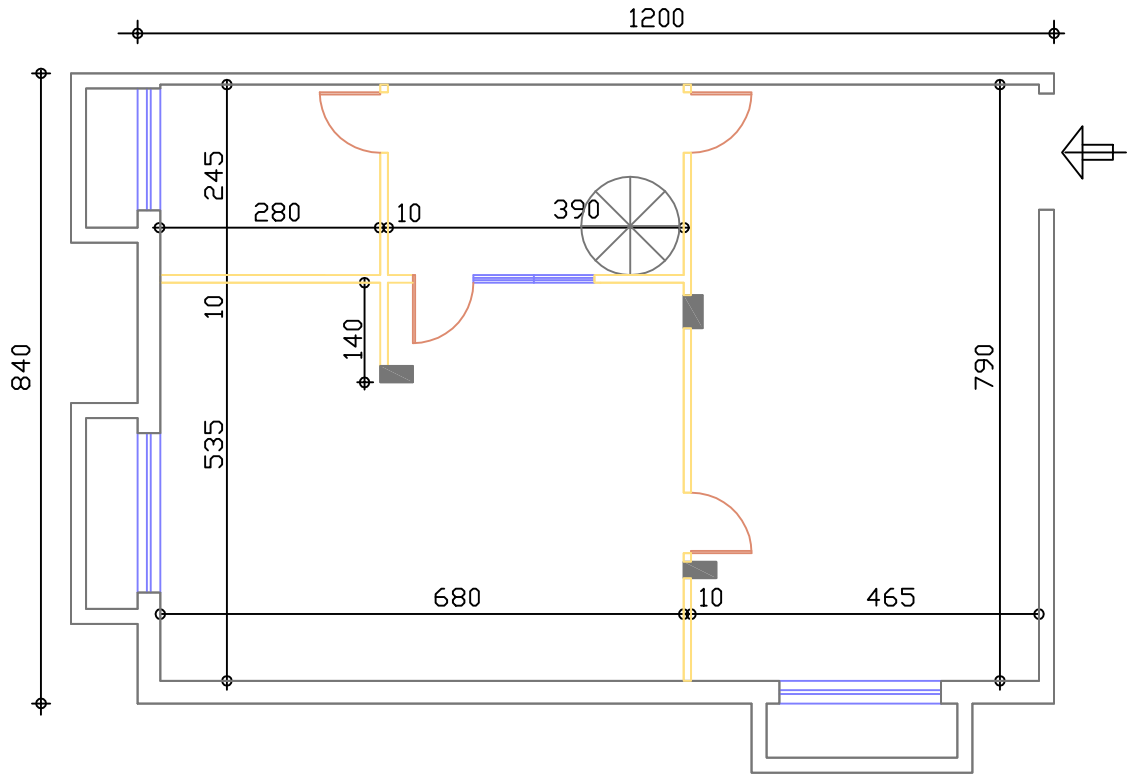

PIANO INTERRATO